V46 series Gauge Root Valves
V56 series Instrument Manifolds

Pressure Rating up to 6000 psig (413 bar)

Catalog No. V56/V46-5
Feb. 2008

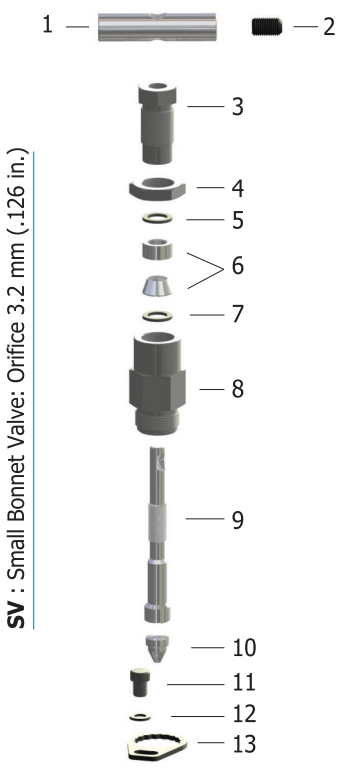

Materials of Construction

Component	Valve Body Materials	
	Stainless steel	Carbon steel
	Bonnet Valve	
	Grade/ASTM specification	
1. Handle	Stainless steel	Aluminiun black anodized
2. Set screw	SS316/A276 or A479	SS316/A276 or A479
3. Packing bolt		C.Steel/A108
4. Lock nut		
5. Upper gland		SS316/A276 or A479
6. Packing	Standard chevron PTFE packing, optional Grafoil	
7. Lower gland	SS316/A276 or A479	SS316/A276 or A479
8. Bonnet		C.Steel/A108
9. Stem		SS316/A276 or A479
10. Non-rotating stem tip	SS630/A564	
11. Lock plate bolt	Stainless steel	
12. Spring washer	Stainless steel	
13. Lock plate	Stainless steel	Carbon steel
14. Body	SS316/A276 or A479	C.Steel/A108 or A105, Yellow zinc galvanized
Flange seals (not shown)	PTFE/D1710, optional Grafoil and florocarbon FKM O-ring	
Flange bolts (not shown)	Stainless steel/A193	Carbon steel/A193
Lubricant	Fluorinated base with PTFE and tungsten disulfide	
	Hydrocarbon based	

Wetted components are listed in blue.

Grafoil: TM UCAR

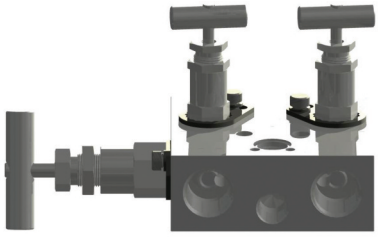

Model shown: VBR56-5V8N-S

LV : Large Bonnet Valve: Orifice 6.4 mm (.251 in.)

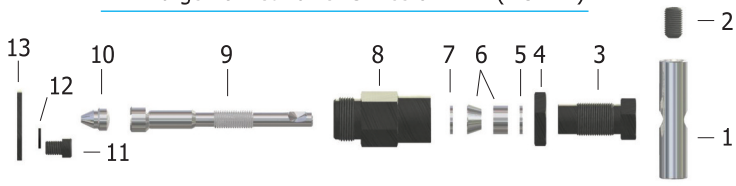

MV :
Medium Bonnet Valve
Orifice 5.0 mm (.196 in.)

Features

- **Non-rotating** stem tip at closure for long-life and leak-tight shutoff.
- **Chevron PTFE packing** design provides far improved sealing integrity.
- **Packing** below stem threads is to isolate **threads** from system fluid and lubricant washout.
- Packing bolt permits stem **packing adjustment.**
- Standard **Lock plate** ensures the valve fastened to the body even excessive operating torque is applied.
- **One piece body construction** provides strength.
- Burr-free internal surface.

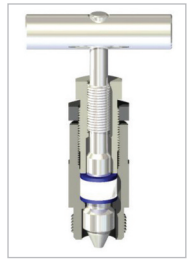

Image shown:
Bonnet Valve.

Feature of packing below stem thread maintains in small, medium and large bonnet valve on manifolds as well as on gauge root valves.

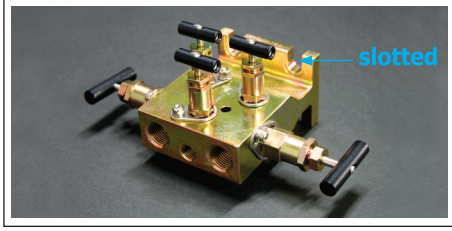

VES56 series **slotted flange** feature facilitates manifolds mounting with long stud hex nut.

Model shown: VES56-5V1F8N-C

Pressure-Temperature Ratings

Manifolds and Gauge Root Valves

Body Material	Packing material	Temperature Rating	Pressure Rating @ 37 °C (100 °F)	Pressure Rating @ Max. Temp.
Stainless steel	PTFE	- 54 to 232 °C (-65 to 450 °F)	413 bar (6000 psig)	285 bar@232 °C 4130 psig@450 °F
	Grafoil	-54 to 648 °C (1) (-65 to 1200 °F)		118 bar@648 °C 1715 psig @ 1200 °F
Carbon steel	PTFE	- 29 to 176 °C (-20 to 350 °F)	413 bar (6000 psig)	360 bar @ 176 °C (5230 psig @ 350 °F)
	Grafoil	- 29 to 176 °C (-20 to 350 °F)		

(1) Grafoil packing rating is limited to 537 °C (1000 °F) with flange end connection. In air, Grafoil rating is limited to 523 °C (975 °F), in steam it can go up to the maximum temperature of 648 °C (1200 °F).

- -28 to 204 °C (-18 to 399 °F) with optional fluorocarbon FKM flange seals.

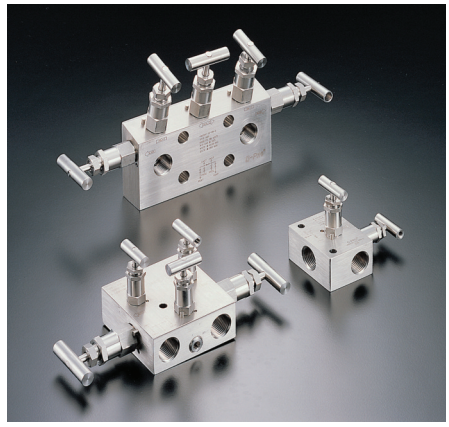

Design

- D-Pro Manifolds and Gauge root valves are designed to ASME B16.34 Class 2500 for pressure-temperature ratings.
- Pressure boundary wetted parts are selected to Chapter III, 123 Materials of ASME B31.1.
- Valve ratings are based on ASME process piping code B31.3.
- To determine pressure rating at 37 °C (100 °F) in accordance with Power piping code B31.1, multiply by 0.94 for stainless steel.

Factory test

- Every manifolds and gauge root valve is factory tested with nitrogen @ 69 bar (1000 psig) for leakage at the seat to a maximum allowable leak rate of 0.1 SCCM.
- Stem packing is tested for no detectable leakage.
- Optional hydrostatic shell test is performed with pure water at 1.5 times the working pressure.

Packing adjustment and Actuation Torque

- Extreme or rapid temperature cycle while valve in service may require packing adjustment. Tighten the packing bolt 1/16 turn clockwise.
- Valves that have not been actuated for a period of time may have a higher initial actuation torque.

Sour Gas Service

- For use valve in sour gas, materials for wetted components are selected in accordance with NACE MR0175 latest revision.

Ordering and Technical Information

Manifolds		Basic Ordering Number	End Connections: Process	End Connections: Instrument	Orifice mm (in.)	Weight Kg (lb.)
Remote Mount		VBR56-2V8N-	1/2 in. Female NPT		3.2 (.126)	0.8 (1.8)
		VBR56-3V8N-			6.4 (.251)	2.0 (4.4)
		VBR56-5V8N-				2.2 (4.9)
Direct Mount	Single Flange	VE56-2V1F8N-	1/2 in. Female NPT to Flange. Flange design meets MSS SP-99.		3.2 (.126)	1.0 (2.2)
		VE56-3V1F8N-			6.4 (.251)	2.2 (4.9)
		VE56-5V1F8N-				2.7 (6.0)
	Double Flange	VE56-3V2F-	Flange to Flange. Flange design meets MSS SP-99		6.4 (.251)	2.5 (5.5)
		VE56-5V2F-				2.7 (6.0)
	Single Flange with slotted feature	VES56-2V1F8N-	1/2 in. Female NPT to Flange. Flange design meets MSS SP-99.		3.2 (.126)	1.0 (2.2)
		VES56-3V1F8N-			6.4 (.251)	2.2 (4.9)
		VES56-5V1F8N-				2.7 (6.0)
	Double Flange with slotted feature	VES56-3V2F-	Flange to Flange. Flange design meets MSS SP-99		6.4 (.251)	2.5 (5.5)
		VES56-5V2F-				2.7 (6.0)
	Vertical	VBD56-2V8N-	1/2 in. Female NPT to Flange. Flange design meets MSS SP-99.		3.2 (.126)	1.6 (3.5)
		VBD56-3V8N-			5.0 (.196)	1.7 (3.8)
		VBD56-5V8N-			6.4 (.251)	3.3 (7.3)
		VBD56S-5V8N-			5.0 (.196)	2.7 (6.0)

How to order manifolds with options

- To order the optional Grafoil packing, add -GF to the ordering number. i.e., VES56-3V1F8N-GF-
- To order sour gas service valve, add-SG to the ordering number. i.e., VES56-3V1F8N-GF-SG-
- To order optional GRAFOIL or FKM O-ring flange seal, add -GF or -VT to the ordering number/ i.e., VES56-3V1F8N-GF-SG-GF(or- VT)-
  Flange seal designators: -GF for Grafoil, - VT for FKM O-ring.
- To complete the ordering number, select valve body material designator:
  - S for SS316, - C for Carbon steel. i.e., VES56-3V1F8N-GF-SG-VT-S.

ⓒ Copyright 2007 DK TECH CORPORATION, All Rights Reserved

Remote mount

Unit: mm (in.)

VBR56-2V8N-

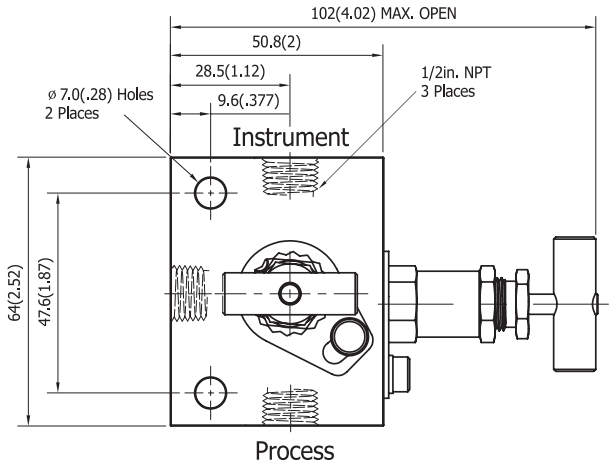

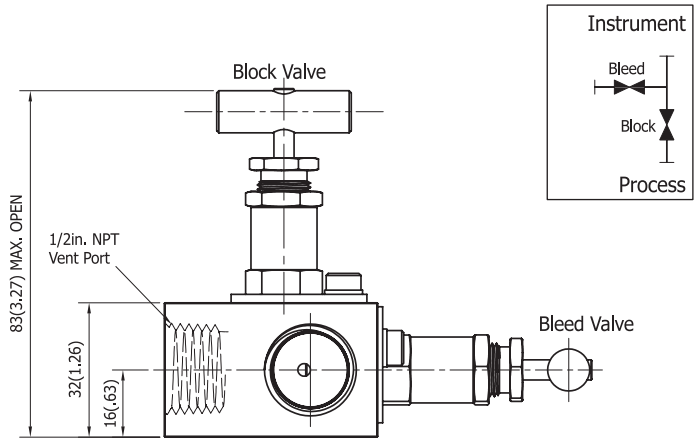

VBR56-3V8N-

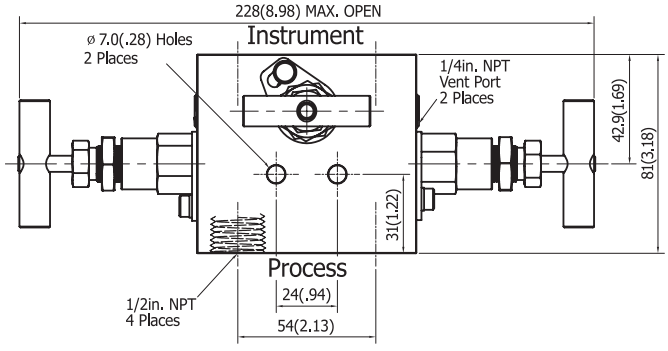

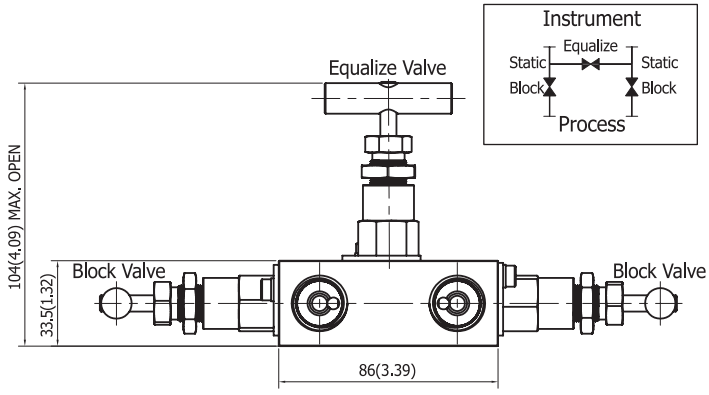

VBR56-5V8N-

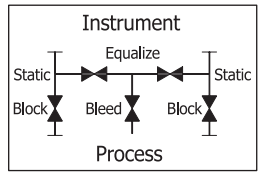

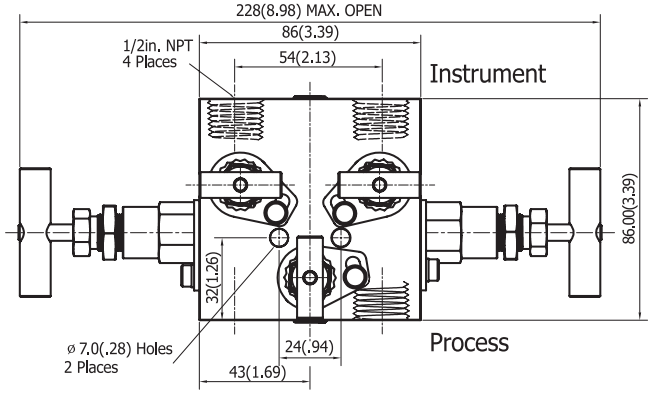

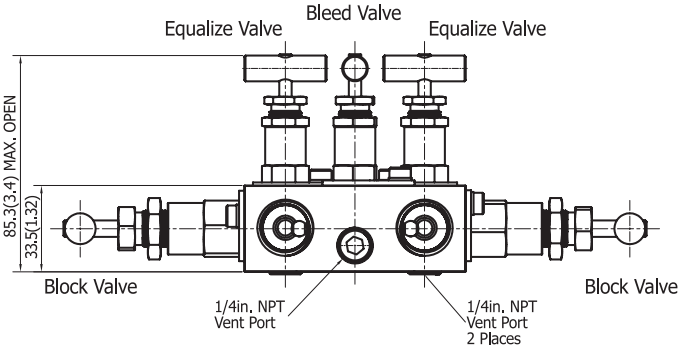

Single Flange Direct Mount

Unit: mm (in.)

VE56-2V1F8N- / VES56-2V1F8N-

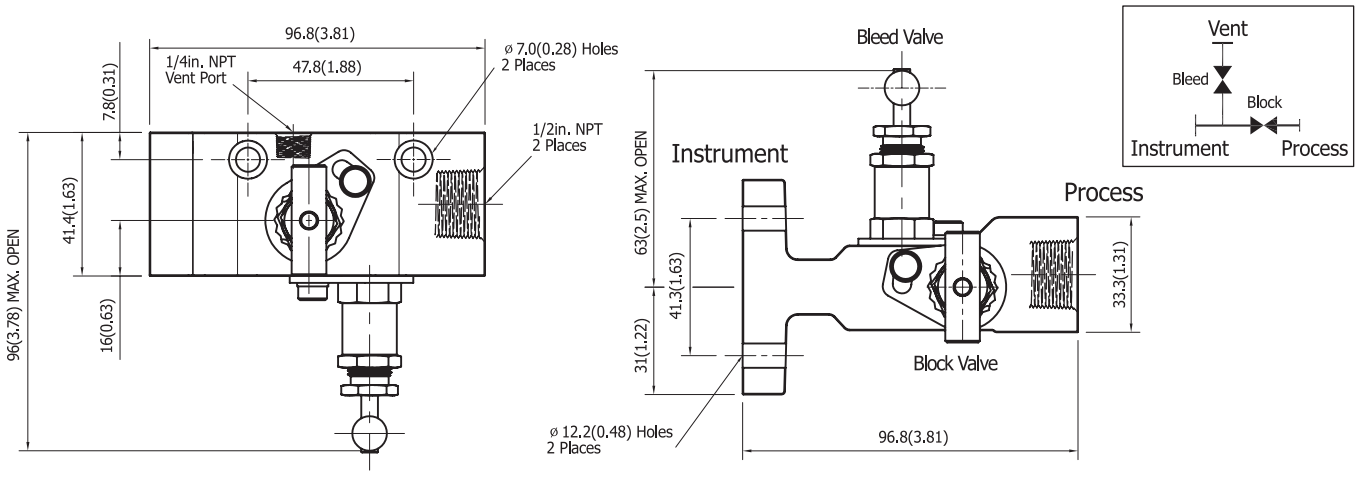

VE56-3V1F8N- / VES56-3V1F8N-

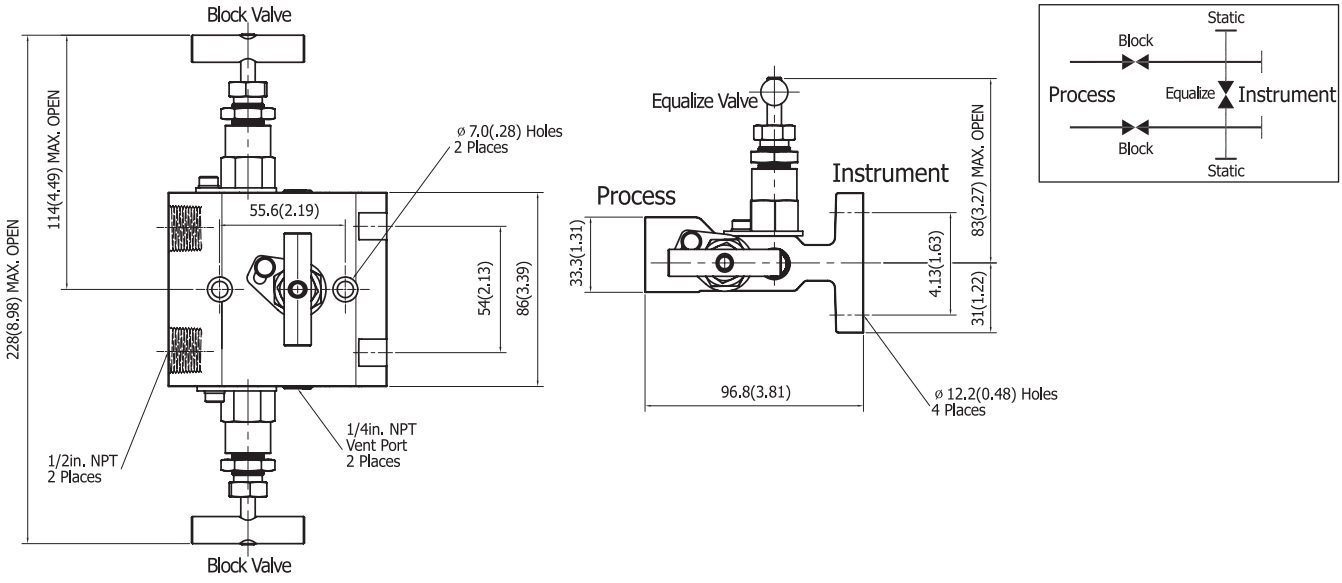

VE56-5V1F8N- / VES56-5V1F8N-

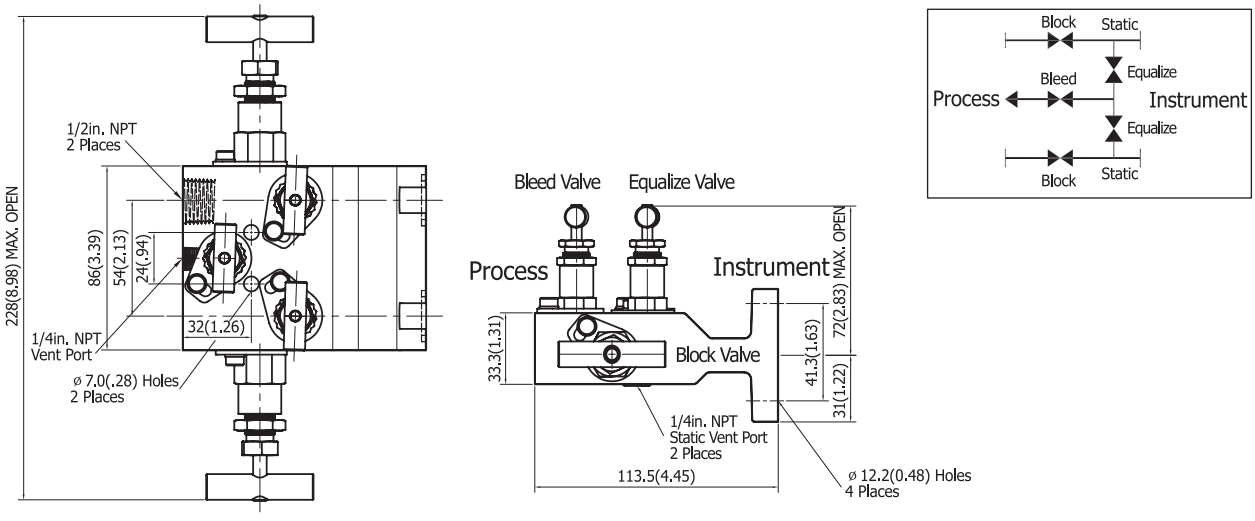

Double Flange Direct Mount

Unit: mm (in.)

VE56-3V2F- / VES56-3V2F-

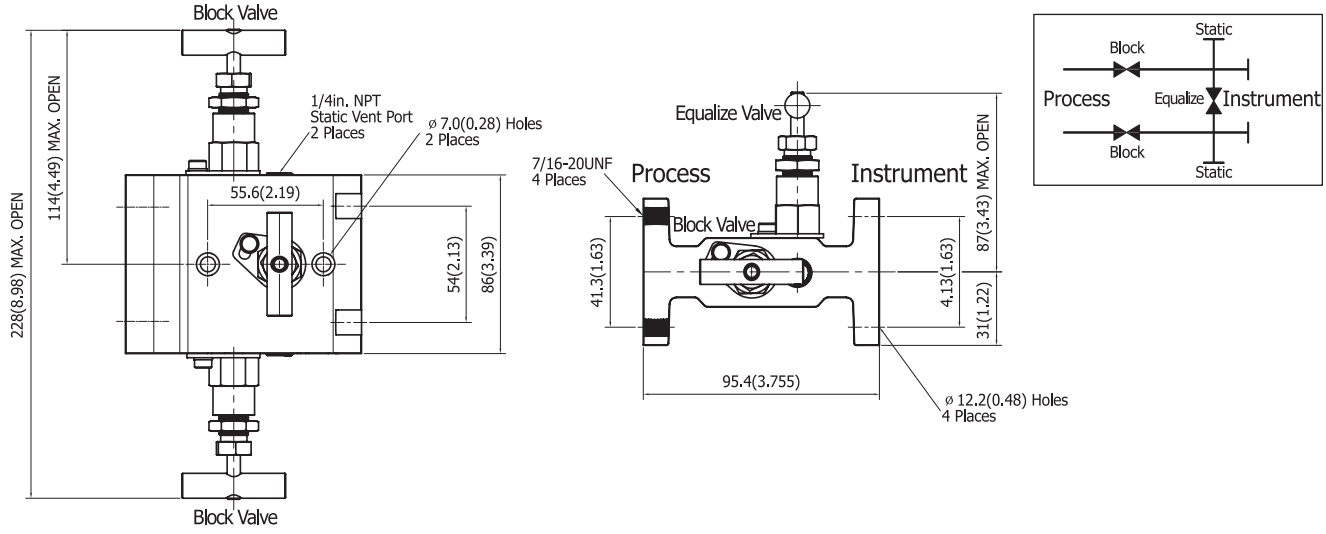

VE56-5V2F- / VES56-5V2F-

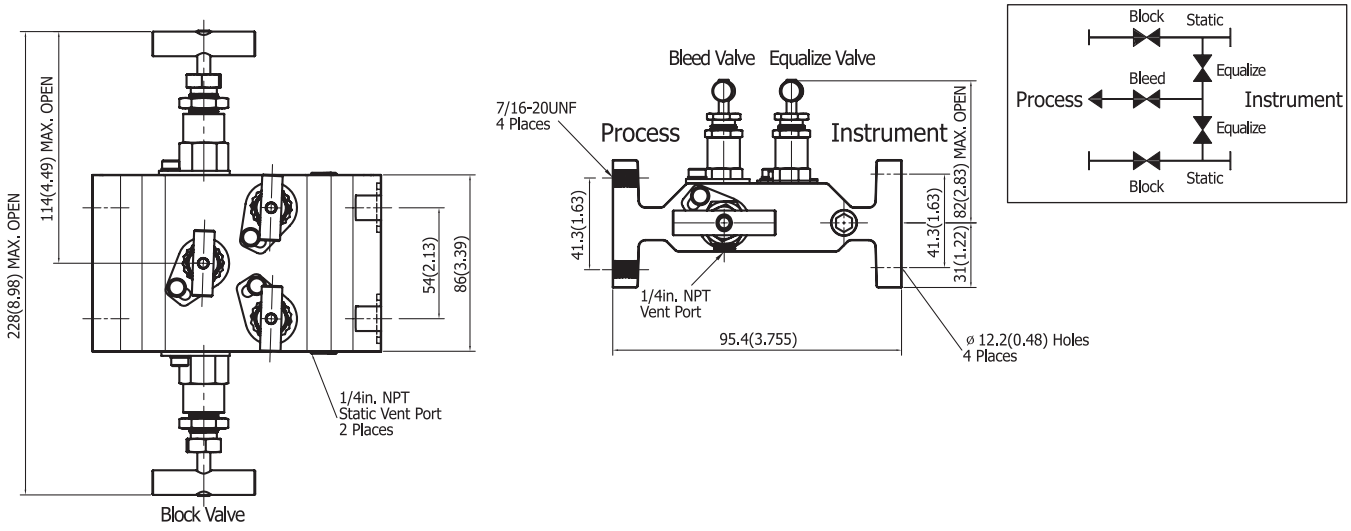

Vertical Direct Mount

Unit: mm (in.)

VBD56-2V8N-

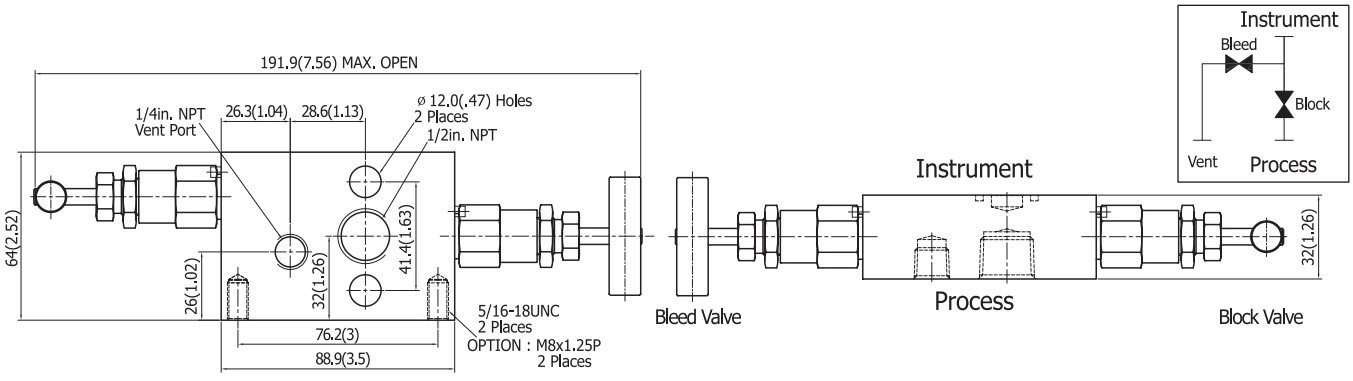

Vertical Direct Mount

Unit: mm (in.)

VBD56-3V8N-

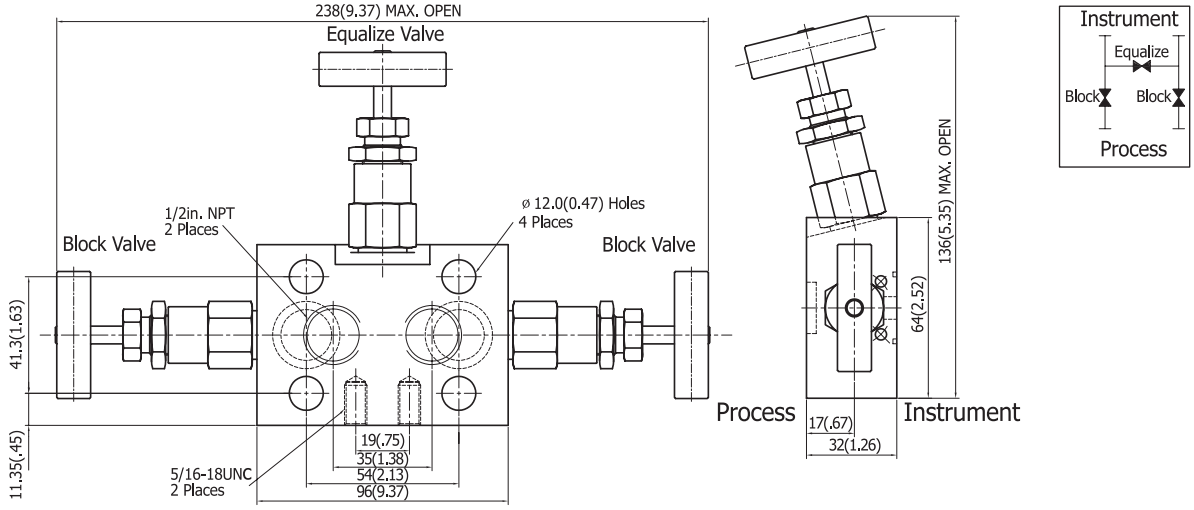

VBD56-5V8N-

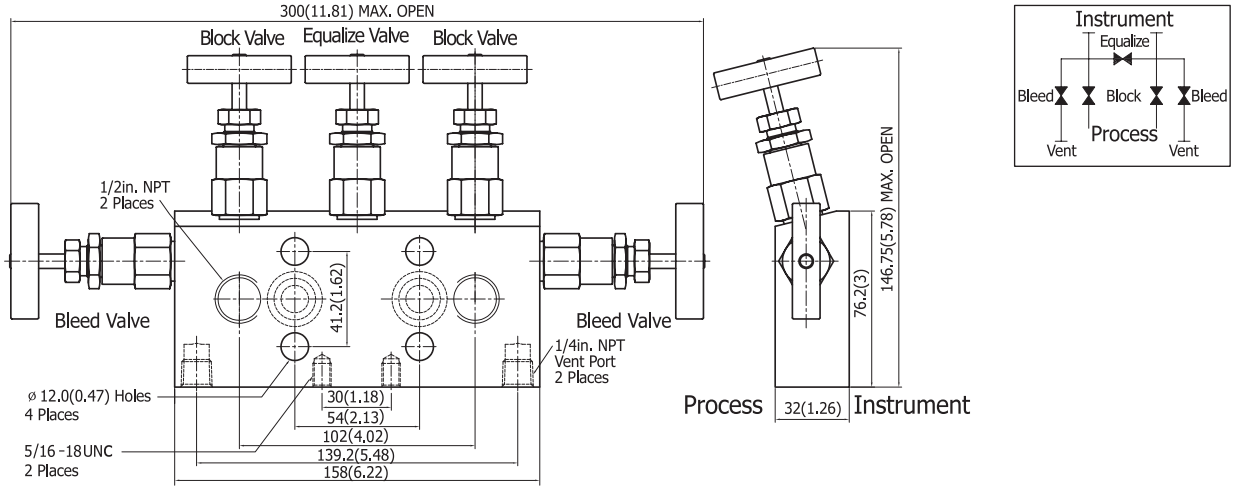

VBD56S-5V8N-

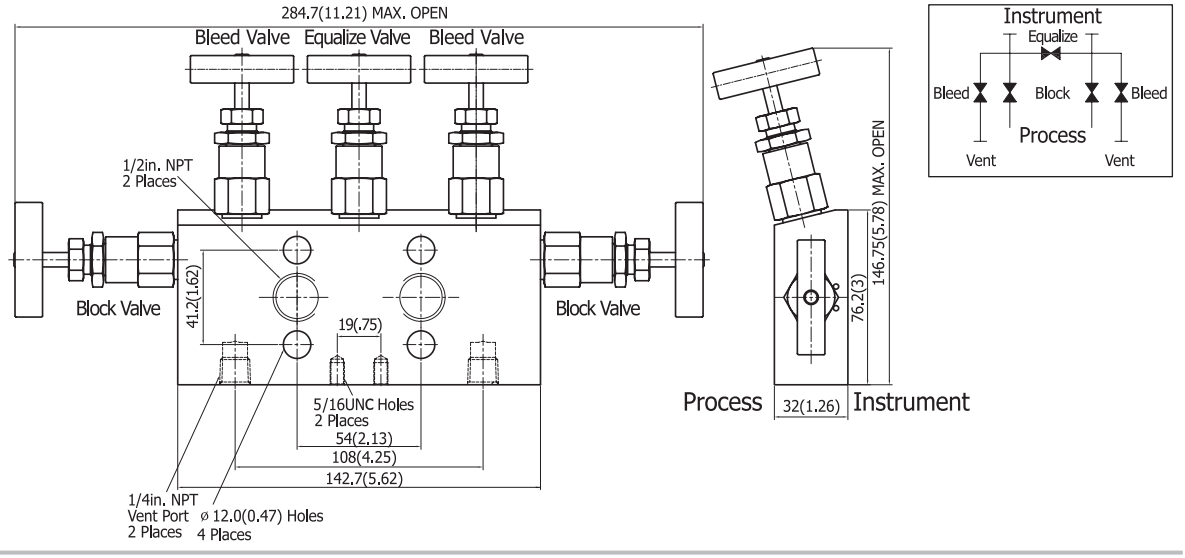

Manifolds Accessories

Flange Bolts

For special mounting applications optional long and short bolts are available. See flange bolt specification below.

Flange Bolt	Threads	Length mm (in.)	Hex Size mm (in.)	Basic Ordering Number	Bolt Material Designator
Standard hex bolt	7/16-20	45.0 (1.77)	15.87 (5/8)	Z56BM-	Stainless steel: S Carbon steel: C
Long stud hex nut	7/16-20	58.0 (2.28)		Z56BL-	
Short hex head bolt	7/16-20	25.0 (.98)		Z56BS-	

To order, add the material designator to the bolt ordering number. i.e., Z56BM-**S**

- Slotted flange manifolds is supplied with long stud hex nut: Z56BL-

Flange Seals

Flange seals are available in standard PTFE, Grafoil and fluorocarbon FKM O-ring for system compatibility.

Seal Material	Temperature Rating °C (°F)	Ordering Number
PTFE	-53 to 121 (-65 to 250)	Z56PE
Grafoil	-53 to 537 (-65 to 1000)	Z56GF
Fluorocarbon FKM (Viton)	-28 to 204 (-18 to 399)	Z56VT

To order, use the ordering number. i.e., Z56PE.

Oval Flange & Pipe Nipple

Eccentric Flanges and Pipe Nipple allow connections of flange-to-flange manifolds to process flange taps or process root valves.

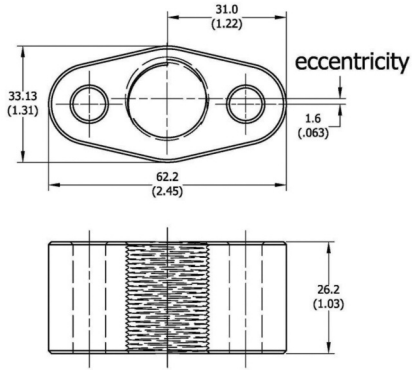

Oval Flange Ordering Number and Technical Information

Material	End Connection	End Connection Size	Ordering Number
Stainless steel	Female NPT	1/2 in. NPT	V56OF-8N-S
Carbon steel			V56OF-8N-C

Pipe Nipple Ordering Number and Technical Information

Material	Ordering Number	Type	Pressure Rating @20°C(70°F)bar(psig)	Temperature Rating°C(°F)	Pressure Rating @ Max. Temp.
Stainless steel /A276	G56NE-8N-S	Eccentric	516 (7 500)	-53 to 648 (-65 to 1200)	147 bar @648 °C (2140 psig @1200 °F)
	G56NC-8N-S	Concentric	689 (10 000)		196 bar @648 °C (2850 psig @1200 °F)

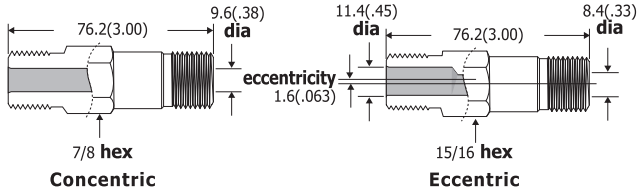

Calibration Fittings

Select DK-LOK differential pressure calibration fitting depending on the bleed port of the transmitter plug.

Ordering Number

Material	Ordering Number	DK-LOK OD	Straight Male Thread
Stainless steel /A276	DPCM4-1U-S	1/4 in.	1/4-28UNF
	DPCM4-2U-S		5/16-24UNF

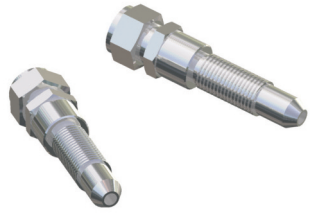

Mounting Bracket Kit

Bracket kit containing bracket, U-bolt, bolt, nut and washer allows horizontal and vertical manifold mounting.

Material	Ordering number
Stainless steel	Z56MBK-S
Carbon steel	Z56MBK-C

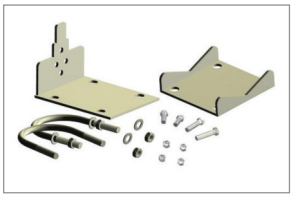

Manifold Mounting

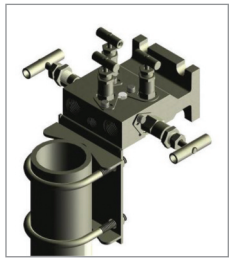

Bonnet Valve Kit

Bonnet valves are available for field assembly.

Bonnet Valve	Basic Ordering Number	Packing Material Designator	Bonnet Valve Material Designator
Small Bonnet Valve	V56SV-	PTFE: Nil Grafoil: GF	Stainless steel: S Carbon steel: C
Medium Bonnet Valve	V56MV-		
Large Bonnet Valve	V56LV-		

- Kit contains bonnet valve, lock plate and set screw.

How to order

Select designator for the desired packing and valve material.
i.e., V56SV-GF-S

D-Pro V46 series Gauge Root Valves

D-Pro Gauge Root Valves offer a safe way of positioning gauges and installing pressure switches.

Features

- 1/2 in. and 3/4 in. male to 1/2 in. female end connections.
- 1/2 in. female gauge ports standard.
- Minimum schedule 160 pipe wall on valve inlet.

Ordering Information and Technical Data

Valve Ordering Number	End Connection NPT	Orifice mm (in.)	Body Length mm (in.) L	MAX. OPEN mm (in.) H	SQ mm (in.)	G mm (in.)	A mm (in.)
V46G-8N-S	1/2 Male to 1/2 in. Female	5.0 (0.20)	90.0 (3.54)	85.9(3.38)	32(1.26)	-	50.00(1.97)
V46GR-8N-S	1/2 Male to 1/2 in. Female		136.0 (5.35)			38.10(1.50)	
V46GR-12N8N-S	3/4 Male to 1/2 in. Female		136.0 (5.35)				
V46GRL-8N-S	1/2 Male to 1/2 in. Female		184.0 (7.24)				
V46GRL-12N8N-S	3/4 Male to 1/2 in. Female		184.0 (7.24)				
V46V2-8N-S	1/2 Male to 1/2 in. Female		119.0 (4.68)				
V46V2-F-8N-S	1/2 Female to 1/2 in. Female		109.0 (4.29)				

- V46GRL has an extended 4.8 inch of pipe insulation.
- V46 series uses Medium Bonnet Valve: Orifice 5.0 mm (.196in.)

How to order

- To order Grafoil option, insert -GF in the ordering number. i.e., V46G-8N-**GF**-S
- To order sour gas service valve, insert -SG in the ordering number. i.e., V46G-8N-GF-**SG**-S

Unit: mm (in.)

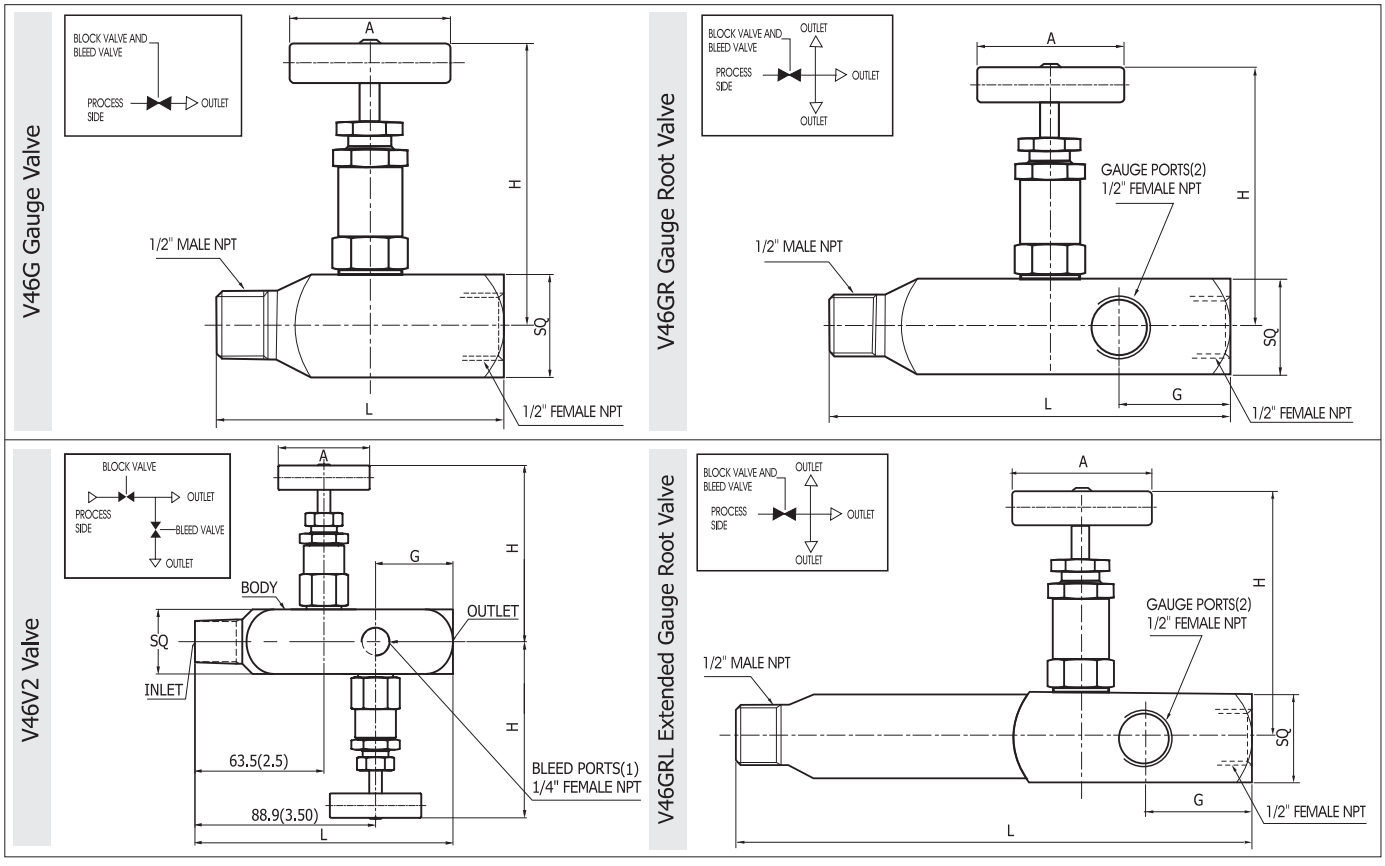

Safe Valve Selection

The selection of a valve for any application or system design must be considered to ensure safe performance.
Valve function, valve rating, material compatibility, proper installation, operation and maintenance remain the sole responsibillty of the system designer and the user. Dk Tech accepts no liability for any improper selection, installation, operation or maintenance.

DK-LOK® Fittings & Valves
www.dklok.com

DK Tech Corporation
Mailing Address
1465, Seobu-ro, Juchon-Myeon, Gimhae-si, South Korea 621-841

DK TECH contact information
Tel. (82) 55-338-0114
Fax (82) 55-338-6745
E-mail: sales@dklok.com

For International customers
Tel. (82) 55-338-0031/2
Fax (82) 55-338-6746
E-mail: dklok@dklok.com